13/03/2026 eDNA Collaborative Arduino SCL and SDA Socket Locations

The Arduino Uno R3 units provided by the eDNA Collaborative do not have labelled SCL and SDA sockets (Figure 1). These sockets are in the same positions as shown for the model of Arduino Uno R3 shown in the *Build Instruction* document (Figure 2), which must be wired to the TSL2591 sensor in *Steps 10 and 11* of the *Body assembly Instructions*. A wiring schematic is provided in Figure 3 to help further clarify the SCL and SDA sockets.

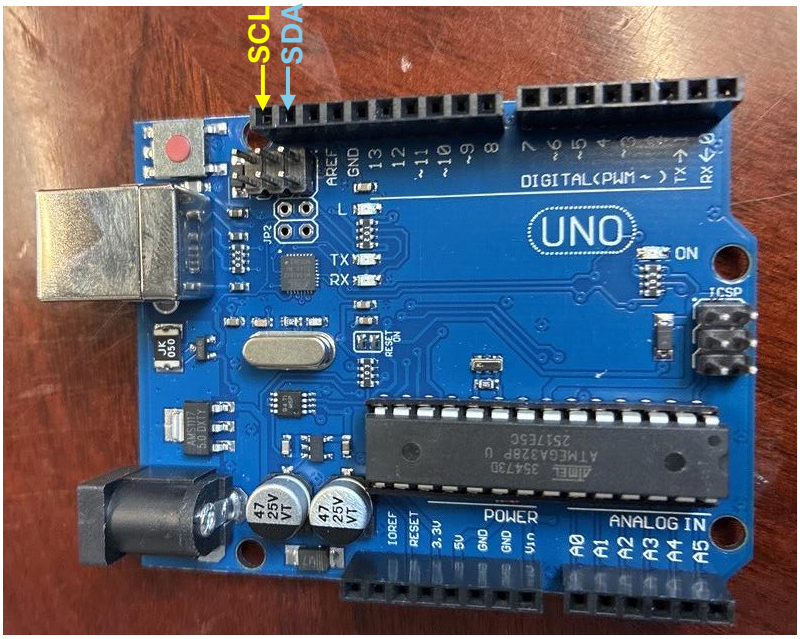

Figure 1: Unlabelled SCL and SDA sockets on Arduino Uno R3 provided with eDNA Collaborative kits.

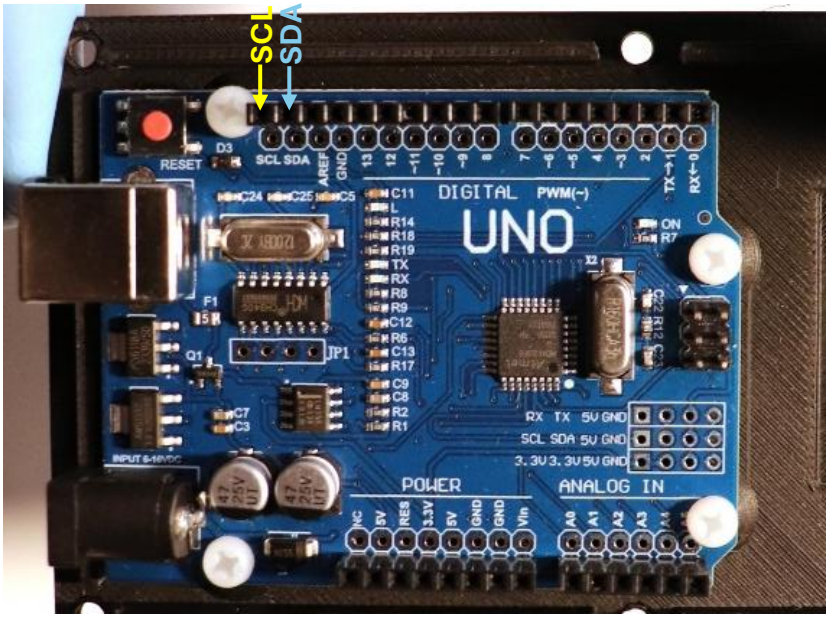

Figure 2. Labelled SCL and SDA sockets on Arduino Uno R3 shown in the *Build Instructions*.

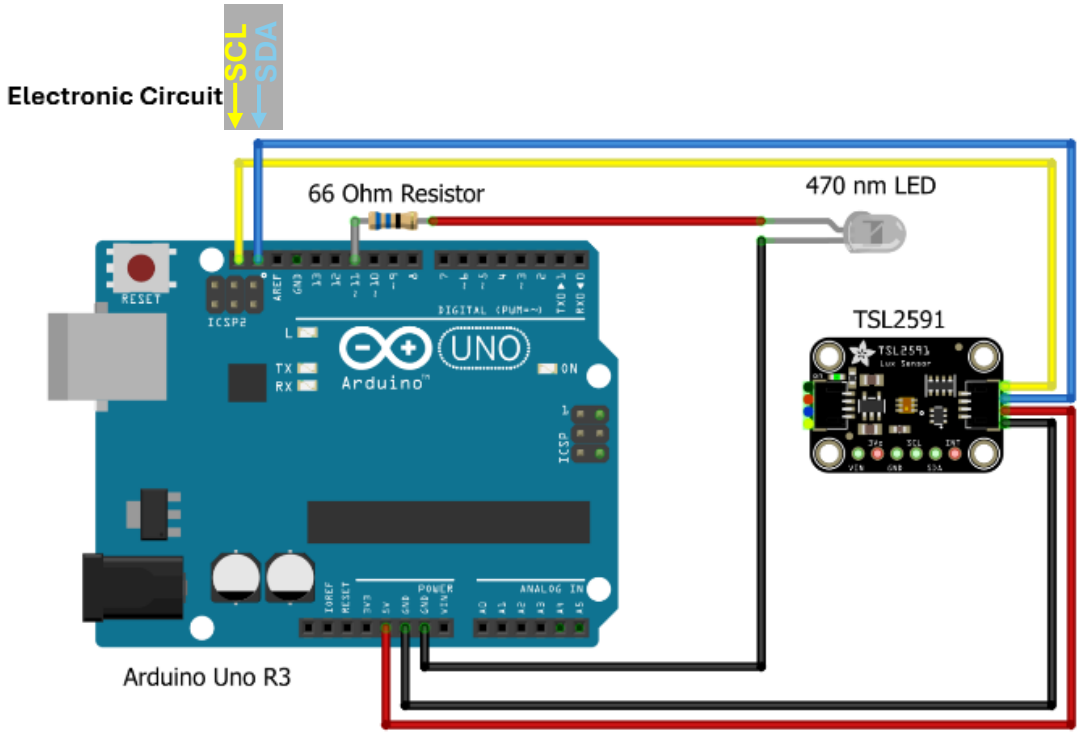

Figure 3. A wiring schematic of the Arduino board showing the correct sockets to wire the SCL (yellow) and SDA (blue) wires of the TSL2591 sensor board.